A – ITEM

This is a sequential number system to identify line item. It is not an architectural tag number (see W) or shop mark. The item number is assigned by the order preparer.

B – PART NUMBER

Not used by customer – part number assigned at order entry by Deansteel.

C – QUANTITY

Number of items required of this line item.

D – CLASS

Class refers to the core of the door required:

SP – Seamed polystyrene (standard)
SH – Seamed honeycomb
SV – Seamed vertically steel stiffened
ST – Seamed temperature rise – 250 degree
SF – Seamed urethane
SS – Stainless steel – (polystyrene standard)

E – SEAM (seamed means edge seams are exposed)

Leave this column blank if standard exposed edge seam is desired.

F – Insert if seam is to be filled with body filler, ground finished.
W – Insert if seam is to be continuously welded, ground & finished.

F – THICKNESS

4 Insert for 1-3/4"
8 Insert for 1-3/8"

G – MATERIAL

Insert gauge of door skins required

20 GA = 20
18 GA = 18
16 GA = 16

Under the column for either C/R – cold rolled steel or GALV – Galvannealed steel (see Tech Data Sheet TD-3). For stainless steel insert gauge under C/R column only.

H. – WIDTH

Width is nominal (not actual) width of the door. Size inserted under FT (feet) in IN (inches) will be reduced by 1/8" each side (1/4" total).

A – ITEM

This is a sequential number system to identify line item. It is not an architectural tag number (see W) or shop mark. The item number is assigned by the order preparer.

B – PART NUMBER

Not used by customer – part number assigned at order entry by Deansteel.

C – QUANTITY

Number of items required of this line item.

D – CLASS

Class refers to the core of the door required:

SP – Seamed polystyrene (standard)
SH – Seamed honeycomb
SV – Seamed vertically steel stiffened
ST – Seamed temperature rise – 250 degree
SF – Seamed urethane
SS – Stainless steel – (polystyrene standard)

E – SEAM (seamed means edge seams are exposed)

Leave this column blank if standard exposed edge seam is desired.

F – Insert if seam is to be filled with body filler, ground finished.
W – Insert if seam is to be continuously welded, ground & finished.

F – THICKNESS

4 Insert for 1-3/4"
8 Insert for 1-3/8"

G – MATERIAL

Insert gauge of door skins required

20 GA = 20
18 GA = 18
16 GA = 16

Under the column for either C/R – cold rolled steel or GALV – Galvannealed steel (see Tech Data Sheet TD-3). For stainless steel insert gauge under C/R column only.

H. – WIDTH

Width is nominal (not actual) width of the door. Size inserted under FT (feet) in IN (inches) will be reduced by 1/8" each side (1/4" total).

Note 1 – If oversized inactive leaf is required add 3/32" to width i.e. 3' 03/32"
Note 2 – If special width door is required, add 1/4" to size required for clearance. i.e. 2' 6-1/2" net required – insert 2' 6-3/4"

CAUTION: IF YOU INSERT 2' 6-1/2" ACTUAL NET WIDTH IN LIEU OF NOMINAL WIDTH, DOOR WILL BE 2' 6-1/4".

I -- HEIGHT

Height is nominal (not actual) height of door. Size inserted under FT (feet and IN (inches) will be reduced by 1/8" at top and ¾" at bottom (7/8" total).

J – FLOOR CLEARANCE

Floor clearance is the dimension from bottom of door to top of finished floor. If floor clearance is other than standard 3/4" (.75") list nominal size in column I and insert floor clearance – 1/4" = .25"; 3/8" = .375"; 1/2" = .5"; 5/8" = .625". Actual door size will be nominal size less 1/8" at top and less floor clearance specified.

K – TYPE

Insert letter(s) for door type required as shown below:

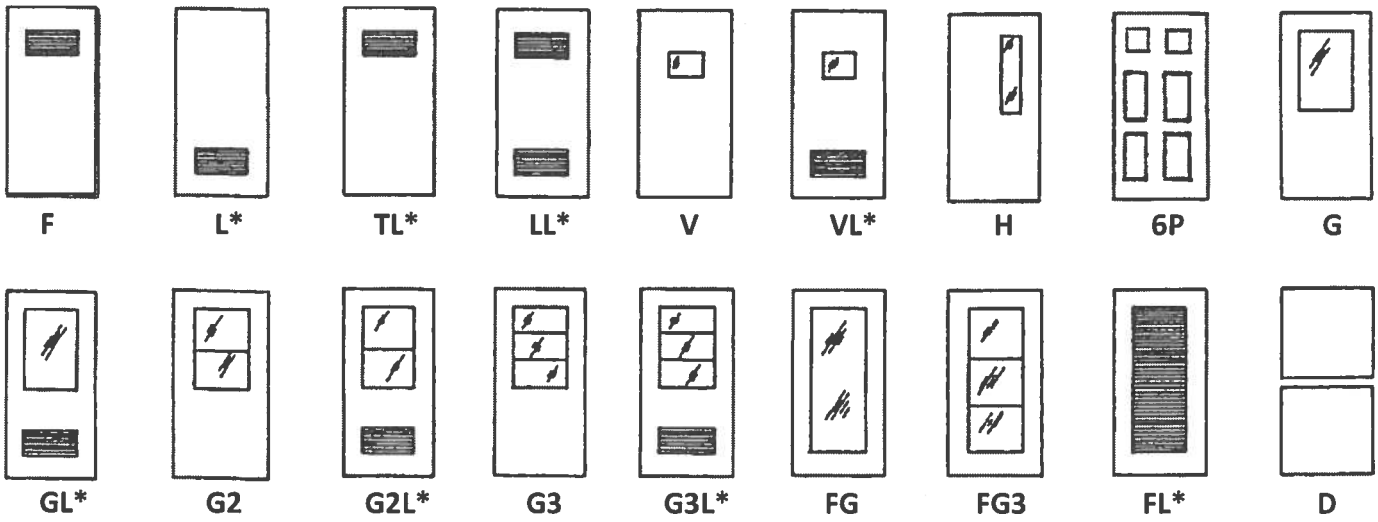

'* All louvers are inserted type (specify size required in Column "X")

EXPOSED GLASS – SEE PRICE BOOK FOR STANDARD SIZES

NOTE 1 – for non-standard size list type above with S1 suffix to indicate special and list exposed glass size in column "X".
NOTE 2 – for non-channeled cut out only, list type above with C1 suffix to indicate cutout only and list cutout size in column "X".
NOTE 3 – for channeled cutout only list type above with CC1 suffix to indicate cutout only and list cutout size in column "X" (CC1 doors with labels can only be furnished to qualified DSM-UL distributors).

L – HAND

Insert letters:

RH	--	Right Hand
LH	--	Left Hand
RHR	--	Right Hand Reverse
LHR	--	Left Hand Reverse
RHRA	--	Right Hand Reverse Active
LHRA	--	Left Hand Reverse Active

M – REINFORCE CLOSER

CL – If closer reinforcement is required.
If not required – leave blank
If special, insert SCL and advise manufacturer & number in Column "X".

N – UL LABEL

Insert rating required (see limitations)

180 = A
90 = B
45 = C
20 = 20 minute

O – MANUFACTURER LOCATIONS

This column is for competitors hardware (lock height and hinge) locations.
Insert abbreviations noted below:

AM = Amweld	FE = Fenestra	REP = Republic
CE = Ceco	KE = Kewanee	SC = Steelcraft
CO = Copco	ME = Mesker	PI = Pioneer
CU = Curries	SPC = Special – see sketch	

P – HINGE

CODE	SPECIFICATION	
235	1 pr 3-1/2"	.123
335	1 ½ pr 3-1/2"	.123
345	1 ½ pr 4-1/2"	.134
345H	1 ½ pr 4-1/2"	.180
445	2 pr 4-1/2"	.134
445H	2 pr 4-1/2"	.180
350	1 ½ pr 5 X 4-1/2"	.146
350H	1 ½ pr 5 X 4-1/2"	.190
MF	Multi-fit	

Q – LOCK

Insert standard lock prep or exit reinforcement

B -- blank, no reinforcing
L1 -- Govt 161 2-1/8" hole @ 2-3/4" B.S. – 1-1/8" X 2-1/4" latch face
MB -- Govt 86 edge – 1-1/4" X 8" -- no face cutouts
S1 -- 4-7/8" strike prep @ 40 15/16" centerline above floor.
S2 -- 2-3/4" strike prep @ 40 15/16" centerline above floor.
86 -- Govt 86 with oblong face cutout @ 2-3/4" B.S. – 1-1/4" X 8" edge prep

EXIT DEVICE REINFORCEMENT

RVE -- Rim and vertical rod reinforcement only, no face or edge cutouts.
P3 -- Mortise exit reinforcement
P4 -- Concealed vertical rod reinforcement
S -- Special list manufacturer and number in column "X" (furnish templates)

R – FUNCTION

List lock or exit function number (library being developed to allow use of simple codes).

S – ADDITIONAL LOCK

L1 -- Govt 161 – 2-1/8" hole @ 2-3/4" BS @ 48" above finish floor
D1 -- Govt 181 – 1-1/2" hole @ 2-3/4" BS @ 48" above finish floor
SP -- Other list manufacturer and number in column "X"
MDL -- Mortise deadlock @ 48" above finish floor, specify lock.

T – FLUSH BOLT

FB -- ANSI 115.4 12" down and 12" up
FB1 -- ANSI 115.4 24" down and 12" up (use 8' high doors)
Special Flush Bolt -- FBS list manufacturer and number – furnish template in column "X"

U – ASTRAGAL AND HANDING

Insert astragal and type desired
F1 -- Flat surface
Z1 -- ZEE type with 4-7/8" strike
Z2 -- ZEE type with 4-7/8" strike and top and bottom ASA F/B
Z3 -- ZEE type blank

NOTE! All astragals are installed on engineered doors. If loose astragal is required, order on stock parts order form.

V – MISCELLANEOUS

Single codes are shown for identification purposes. If multiple items are required they should be listed in alphabetical sequence shown.
SB -- Surface Bolt
TC -- Installed top cap
TBC -- Installed top and bottom cap
TCS -- Installed and caulked top cap
TBS -- Installed and caulked top and bottom cap
DV -- Door viewer – insert hole size in column "X" and location
MS -- Mail slot – advise manufacturer and number and location
MCO -- Monorail – enclose drawing
DRB -- DB door bottom – advise manufacturer and number
O -- Other list in column "X"
PR -- PR inserted indicates pair – 2 line items will always travel together
WPR – Pair with <u>WIDE INACTIVE</u> leaf

W – TAG

Insert architectural mark or number you want product marked, additional charges apply.

X – OTHER INFORMATION

Insert special glass / louver sizes or special hardware information.

Y – UNIT LIST PRICE -- (insert unit price)

FRAMES

A – ITEM

This is a sequential number system to identify line item. It is not an architectural tag number (see W) or shop mark. The item number is assigned by the order preparer.

B – PART NUMBER

Not used by customer – part number assigned at order entry by Deansteel.

C – QUANTITY

Number of items required of this line item.

D – PROFILE

Insert letter of profile required – if special profile insert D/S and attached details

FRAME PROFILES

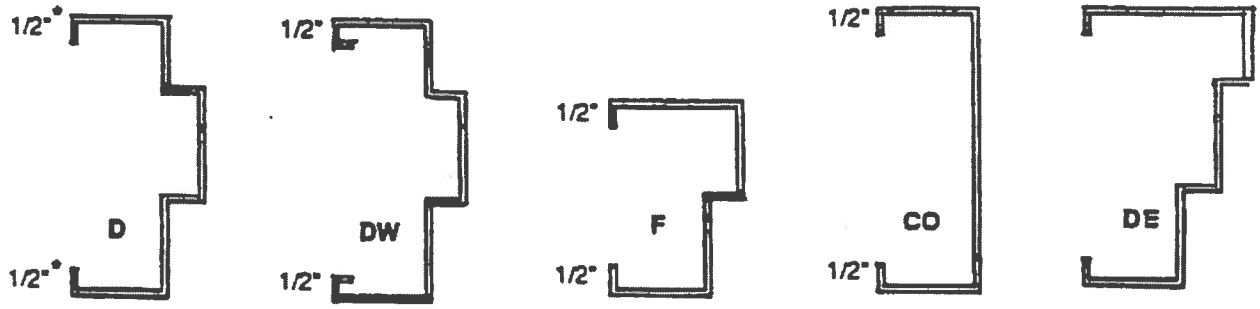

'* RETURNS ON 5-3/4" J.D. Frames are 7/16" in lieu of 1/2" to produce a 4-7/8" throat.

STICK PROFILES

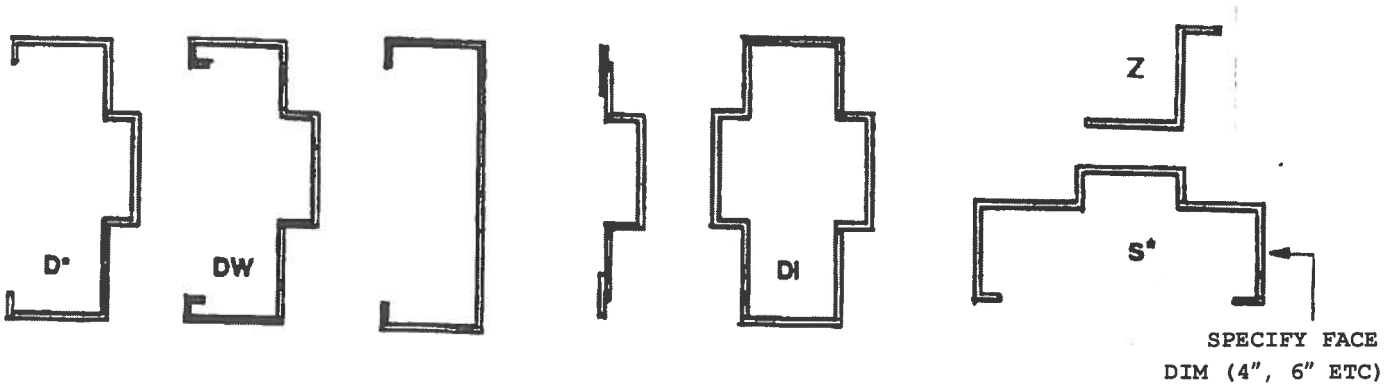

E – THICKNESS

Insert 4 for 1-3/4"
Insert 8 for 1-3/8"

F – MATERIAL

Insert gauge of door skins required
18 GA = 18
16 GA = 16
14 GA = 14
Under the column for either C/R – cold rolled steel or GALV – Galvannealed steel (see Tech Data Sheet TD-3). Stainless steel enter under C/R – i.e. 18SS.

G – WIDTH

Width is actual dimension of opening from jamb rabbet to jamb rabbet (see below):

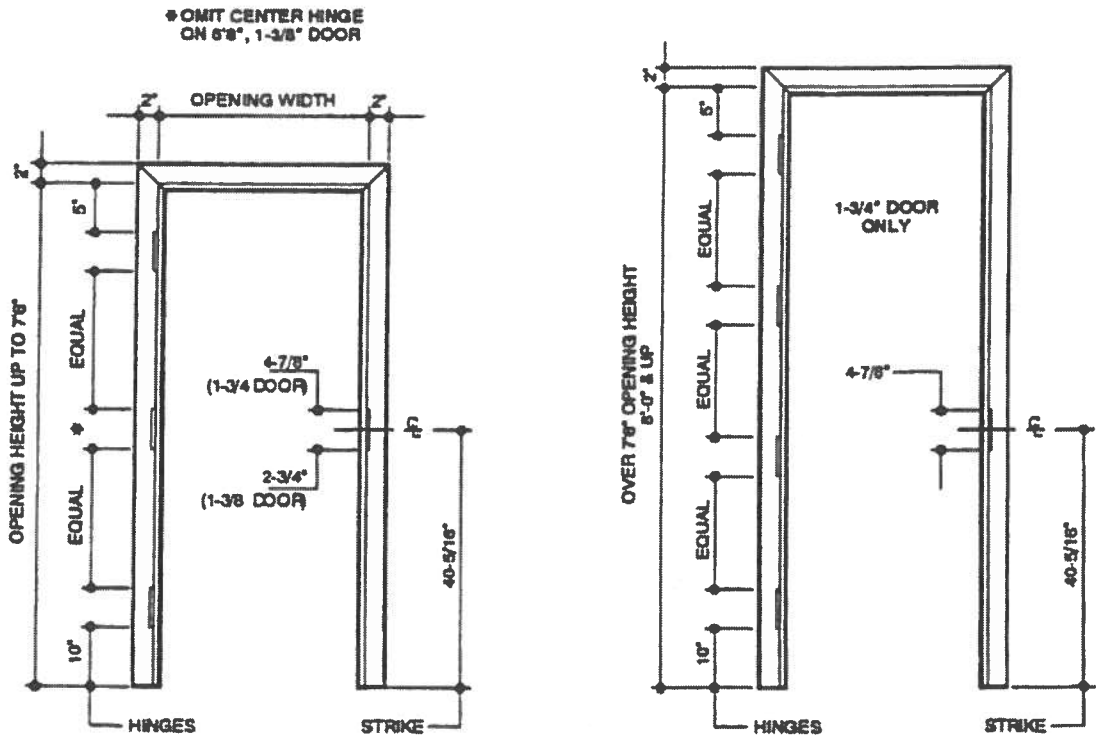

HARDWARE LOCATIONS:

Insert feet and inches in proper columns (i.e. 3'0" wide opening insert 3 in FT column; 0 in Inch column).

H – HEIGHT

Height is actual dimension from underside of head rabbet to bottom of frame (see detail under G above).

I – DEPTH

Insert overall jamb depth required.

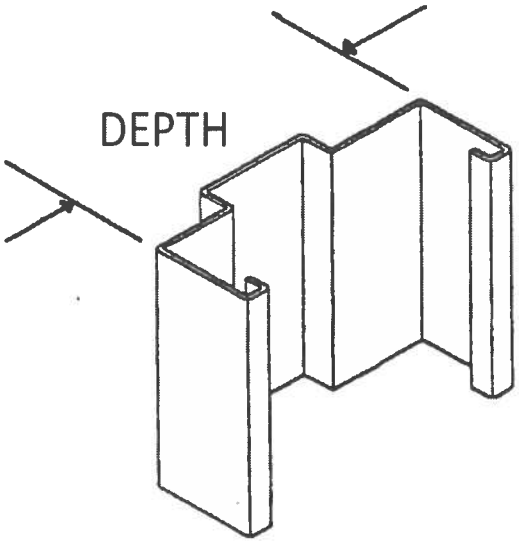

NOTE: Backbends on 5-3/4" stock frames are 7/16" in lieu of 1/2".
ALL other backbends are 1/2" unless you specify otherwise.

J – HAND

Insert (RH) Right Hand or (LH) Left Hand for single openings. Insert active leaf of door handing (for FB prep) for double openings (RHA, LHA, RHRA or LHRA).

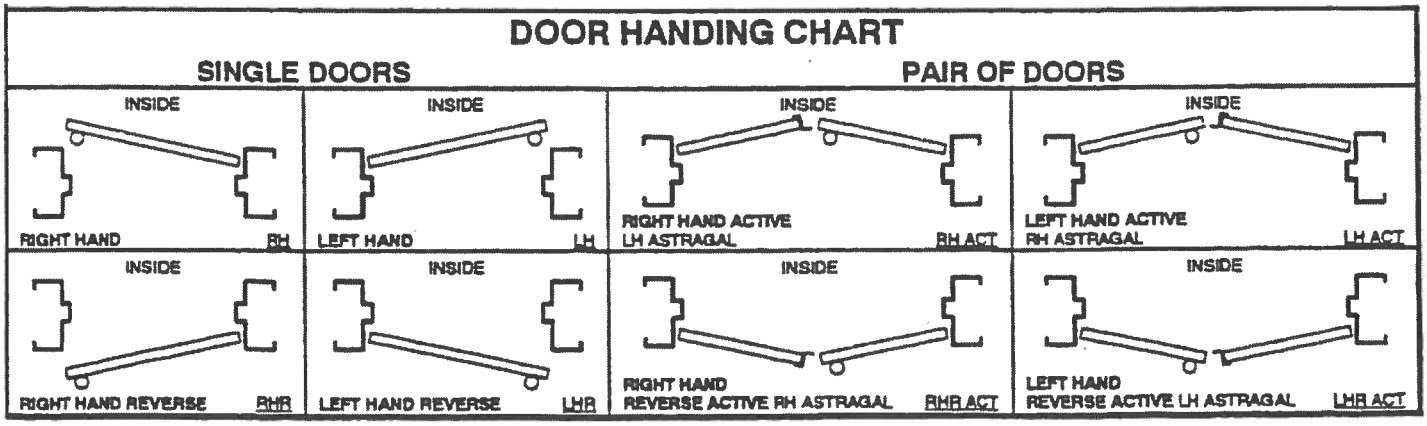

K – CONSTRUCTION

KD --	Knocked Down
SMO --	Saw Miter Only
SMW –	Saw Miter Weld
SUTW --	Set-up Tab Weld
SUFW --	set-up Face Weld

L – ANCHOR

Indicate anchors required

COMP --	Compression anchor standard on DW frame
EMA --	Existing Masonry Anchor UL type 6 / frame
EMA8 --	Existing Masonry UL type 8 / frame
M --	Masonry wire 6 / frame
M8 --	Masonry wire 8 / frame
T --	Masonry T 6 / frame
T8 --	Masonry T 8 / frame
UNA --	Universal 6 / frame
UNA8 --	Universal 8 / frame
WML --	Masonry / label welded strap 6 / frame
WPS --	Welded in pipe sleeve – non UL
WSS --	Welded in steel stud "z" 6 / frame
WSS8 --	Welded in steel stud "z" 8 / frame
WWS --	Welded in wood stud anchors 6 / frame
WWS8 --	Welded in wood stud anchors 8 / frame
X --	Other

M – U.L. LABEL

All stock frame hinge jambs are embossed with a U.L. embossment – non stock frames must have a metal label attached. Place "UL" for UL Label for A, B, C, D, or E labeled doors (frames carry no hourly rating) or 20 for 20 minute label.

N – MANUFACTURERS LOCATIONS

This column is for competitors hardware (lock height and hinge) locations. Insert abbreviations noted below:

AM = Amweld	FE = Fenestra	REP = Republic
CE = Ceco	KE = Kewanee	SC = Steelcraft
CO = Copco	ME = Mesker	PI = Pioneer
CU = Curries	SPC = Special – see sketch	

O – HINGE

CODE	SPECIFICATION	
235	1 pr 3-1/2"	.123
335	1 ½ pr 3-1/2"	.123
345	1 ½ pr 4-1/2"	.134
345H	1 ½ pr 4-1/2"	.180
445	2 pr 4-1/2"	.134
445H	2 pr 4-1/2"	.180
350	1 ½ pr 5 X 4-1/2"	.146
350H	1 ½ pr 5 X 4-1/2"	.190
ANCH	Anchor hinge (specify)	
CPVT	Center Hung Pivots (specify Mfr)	
--e	Electriic (specify)	
DM	Double Mortise (specify size)	
DA	Reinforce for DBL acting spring hinge full height	
DM	Double Mortise (specify depth)	
IPVT	Inter pivot	
PVT	Pivot single acting offset – specify mfr.	

P – STRIKE

Locks (Strikes)

S1 -- Universal ASA strike 4-7/8" ASA 115.1 or 115.2 (1-3/4" doors only).
S2 -- ASA 115.3 2-3/4"
B -- blank
H -- Schlage
E -- Electric strike (specify)
S5 -- Reinforce for rim panic strike (blank jamb).

Deadlocks

S3 -- ASA 115.5
S4 -- ASA 115.3 (no lip)

If standard strike and deadlock are required – insert S1 in this column and S4 in miscellaneous column (R).

Q – REINFORCE FOR CLOSER

Leave blank if not required OR insert

RA	for regular arm mount
PA	for parallel arm mount
TJM	for top jamb mount
BR	for bracket mount
SCL	for special and advise manufacturer and number in column "T"

R – MISCELLANEOUS

01	Bundle and tag 3 piece frame
02	Communicating frame – 1-3/4" both sides
03	Communicating frame – 1-3/8" both sides
04	Concealed vertical rod strike
05	Dutch frame
06	Flush bolt prep ANSI 115.4
07	4" face head – double frame
08	4" face head – single frame
09	Hospital stop – install and finish
10	Hospital stop – cutout only
11	Metal building profile – no return
12	Rim panic reinforcing
13	ANSI 115.5 strike with lip @ 48" AFF
14	ANSI 115.3 (no lip) strike @ 48" AFF
15	Special hinge locations – over 50 no charge
16	Special hinge locations
17	Vertical rod strike reinforcement
18	Other

S – TAG

Insert architectural mark or number you want product marked. If tag number is inserted a charge will apply.

T – OTHER INFORMATION

Insert special information here.

U – UNIT LIST PRICE

Insert unit list price.